GENERAL NOTES AND SPECIFICATIONS

1. BASIC IMPULSE LEVEL: 60 kV
2. BODY MATERIAL: INDOOR BIS-A EPOXY, RED
3. INSERT MATERIAL: ZINC PLATED STEEL
4. WEIGHT: 1 lb(s)

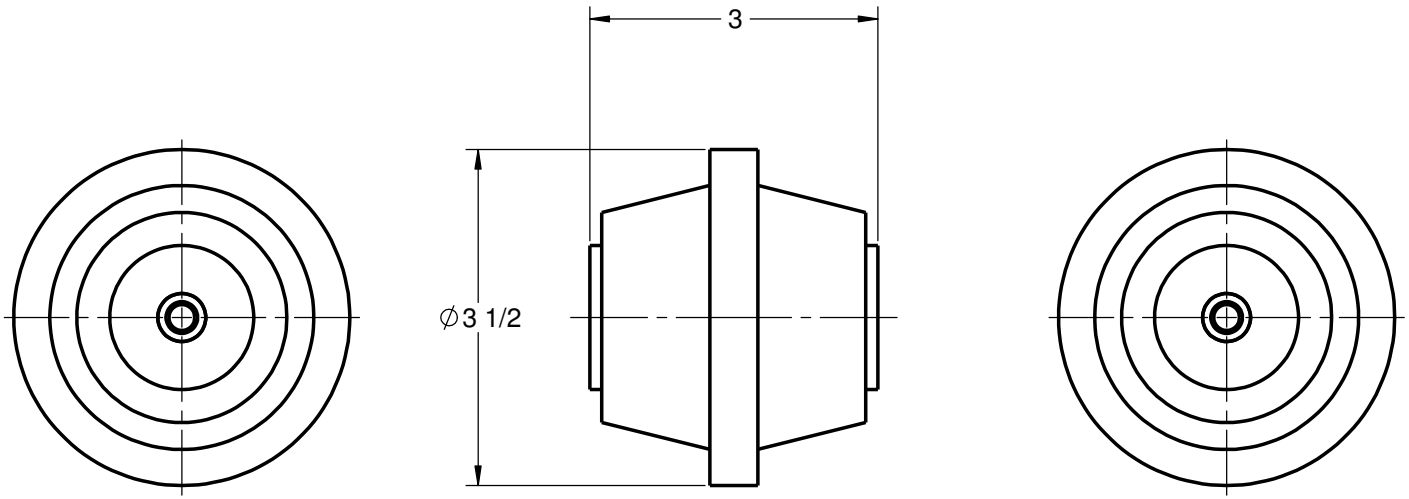

COMMON OPTIONS

CHOOSE TOP AND BOTTOM MOUNTING CONFIGURATION FROM TABLE BELOW

OTHER MOUNTING CONFIGURATIONS ARE ALSO AVAILABLE UPON REQUEST

SERIES ITEM	CONFIG
105-403-01	A1A1
105-403-10	A9A9
105-403-15	A8A8
105-403-41	C1C1

STANDARD MOUNTING INSERT CONFIGURATION

A1

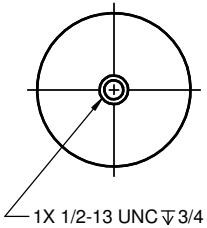

A8

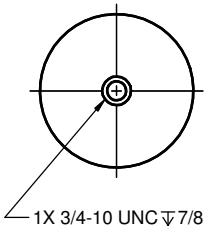

A9

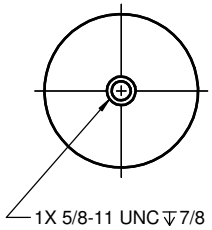

C1

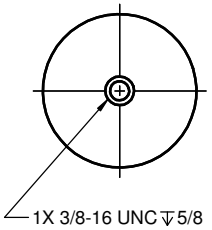

POLYCAST®
486 SHEPPARD ST
WINNIPEG, MB
CANADA R2X 2P8
www.polycast.ca

CONFIDENTIALITY

THIS DRAWING ALONG WITH INFORMATION AND RELATED DOCUMENTS MAY NOT BE DUPLICATED OR RELEASED IN WHOLE OR IN PART WITHOUT WRITTEN PERMISSION AND IS THE EXCLUSIVE PROPERTY OF POLYCAST INTERNATIONAL

PRODUCT SERIES

PIID SERIES - 4.8kV/60kV BIL INSULATOR

SERIES NUMBER

105-403-00